Arch bridges
Arch'04
P. Roche and E. Oñate (Eds.)

ERECTION OF NETWORK ARCHES

Mathias Räck°, Frank Schanack,^ Per Tveit*

°Dipl.-Ing., MaurerSöhne, Frankfurter Ring 193, D-80807 München, Germany
e-mail: Mathias.Raek@gmx.net

^Dipl.-Ing., Motorway Construction Office of Saxony, Dept. of Struct. Engineering, Bridge Planning Unit, Bautzener Straβe 19, 01099 Dresden, Germany. e-mail: frank.schanack@abasn.smwa.sachsen.de

*Dr. Ing. Docent Emeritus, Agder University College, N-4876 Grimstad, Norway.
e-mail: per.tveit@hia.no

Key words: Network arches, Arch bridges, Erection, Aesthetics, Slenderness, Lightness, Cost

Abstract. Network arches are bowstring arch bridges with inclined hangers that cross each other at least twice. The use of many hangers reduces bending in the arch and tie and therefore they can be made very slender. Network arches are likely to remain the world's most slender arch bridges. This publication is about the erection of this very efficient structure.

For distances between the arches of less then 18 m the tie should be a concrete slab. The tensile force is taken by longitudinal prestressing cables. The arch is very slender. In many cases the small bending moments and the efficient support against buckling by the hangers favours the use of universal columns or American wide flange beams.

In the network arches in Norway the tie was cast on formwork resting on timber piles in the riverbed. The arch and hangers were erected from the concrete lane. The hangers were tightened with great care till the arch carried the tie.

A light temporary lower chord is suggested to obtain a steel skeleton with enough strength and stiffness to carry the casting of the permanent concrete tie. During erection the steel skeleton can be moved when lifted at the end of the spans. The temporary lower chord can be reused for many spans or modified for different projects.

If the network arch is the main span over a navigable waterway, the steel skeleton can be erected on the approaches and be lifted in place by a pontoon or a crane. If the steel skeleton already has the correct shape, no further adjustment of hanger is necessary. In cold climates the steel skeleton can be erected on ice and lifted onto the abutments.

Network arches are very efficient structures. They need less structural steel than other bridges. Efficient methods of erection can make them very economical.

1 INTRODUCTION

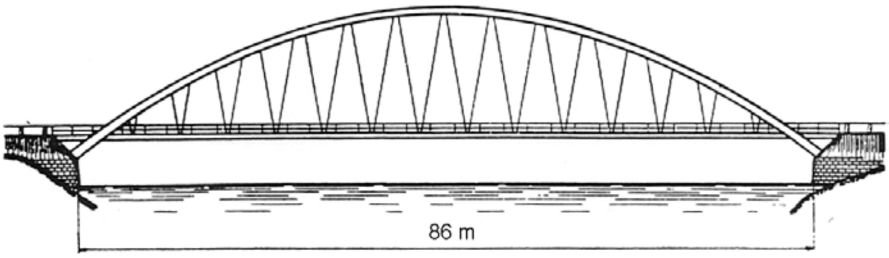

Fig 1. Bridge over Øster-Dalälv in Sweden

The forerunner of the network arch is O. F. Nilsen's bridges with inclined hangers. Many of them were built in Sweden between the two World Wars. See fig. 1. The method of building described in [i] is quite interesting. Work on the abutments started at the end of the winter. In the autumn the beams in the tie were cast on a timber structure. In the spring the arches were cast before the ice was swept away. Finally the plate in the tie was cast.

2 ERECTION OF OPTIMAL NETWORK ARCHES

The slender members make it more difficult to erect optimal network arches, but the lightness of the structure compensates for this. It is important that the span can be lifted only if held very near the ends of the span. To get full advantage of a network arch, one or more detailed methods of erection must be part of the design.

Normally it is best that the choice of the method of erection is not decided by the steel contractor. He might want to use more steel than optimal. He might even want to have permanent steel beams in the tie. He should of course be free to suggest improvements in a complete design presented by the owner.

2.1 Erection from scaffolding in a river

The two Norwegian network arches were erected on timber structures resting on piles in the riverbed. See fig. 2. When the concrete tie had been cast, the steel was erected and the cables in the hangers were tightened till they carried the tie. Then the timber structure was removed. In order to control the built-in stresses, great care was needed in the adjustment of hangers. How to do this is described in "Adjustment of hangers in network arches". These instructions can be found in[ii].

The above method of erection can be applied when permanent pillars are not allowed in the river, but a temporary structure can be tolerated. It can also be applied in countries like Peru where some rivers can be trusted to be dry more than half the year. It can also be used for optimal network arches in flyovers.

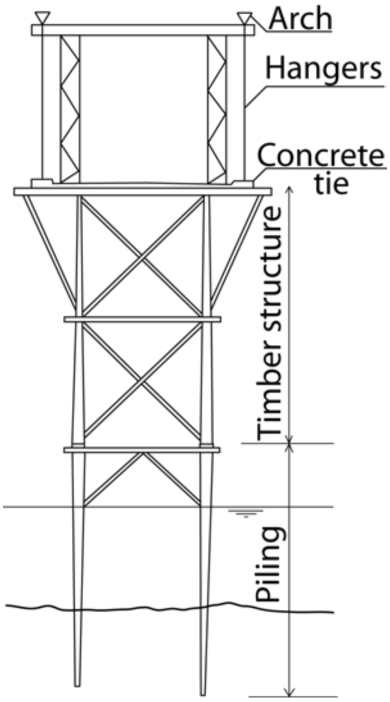

Fig. 2: Timber structure supporting the building of Bolstadstraumen Bridge in 1963.

2.2 Erection from side spans and/or approaches

The most promising methods of erection utilize a temporary lower chord. The structural steel supplemented by a temporary lower chord has so much strength and stiffness that it can be moved if lifted at both ends of the span. See fig. 3 and [ii]. The steel weight of the temporary lower chord is normally 15 % to 25 % of the steel weight of the network arch.

This steel skeleton can support the form while the concrete tie is cast. The temporary lower chord can be put together on site. No welding is needed. No corrosion protection is needed. The materials do not necessarily have to be brought to a workshop.

The ends of the lower chord are cast first. Then the prestressing cables can take some of the tension away from the temporary lower chord. Then the edge beams under the arch are cast. In order to avoid working joints and the relaxation of hangers, it might be necessary to start the casting the edge beam from both ends of the span.

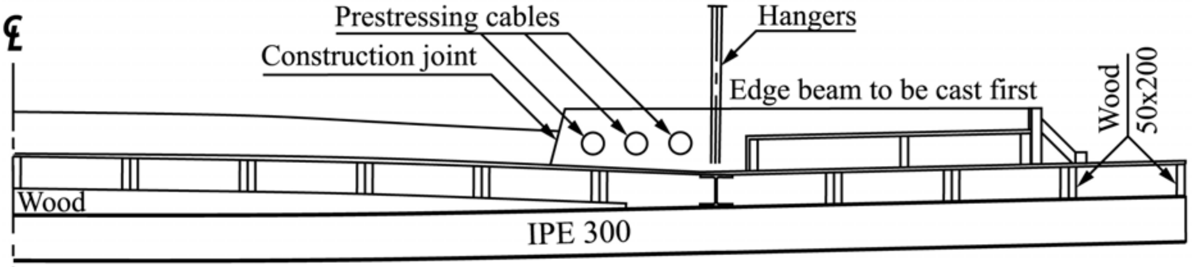

Cross-section of formwork and half the permanent and temporary lower chord

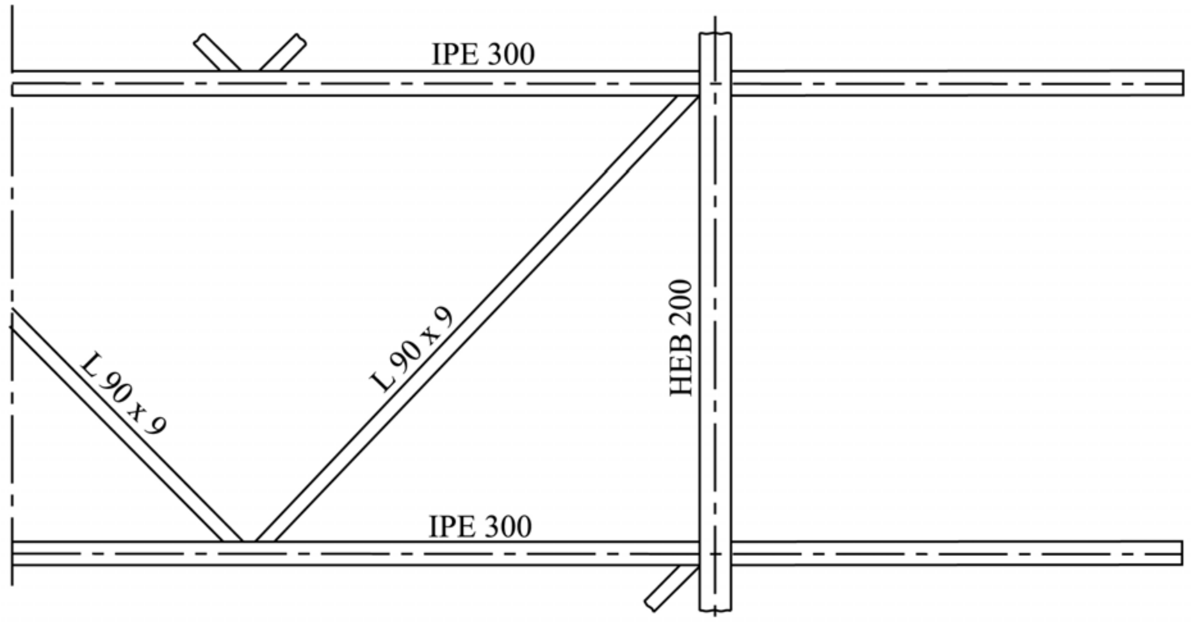

Steel in temporary lower chord seen from above.

Fig. 3. A temporary lower chord for a network arch[ii]

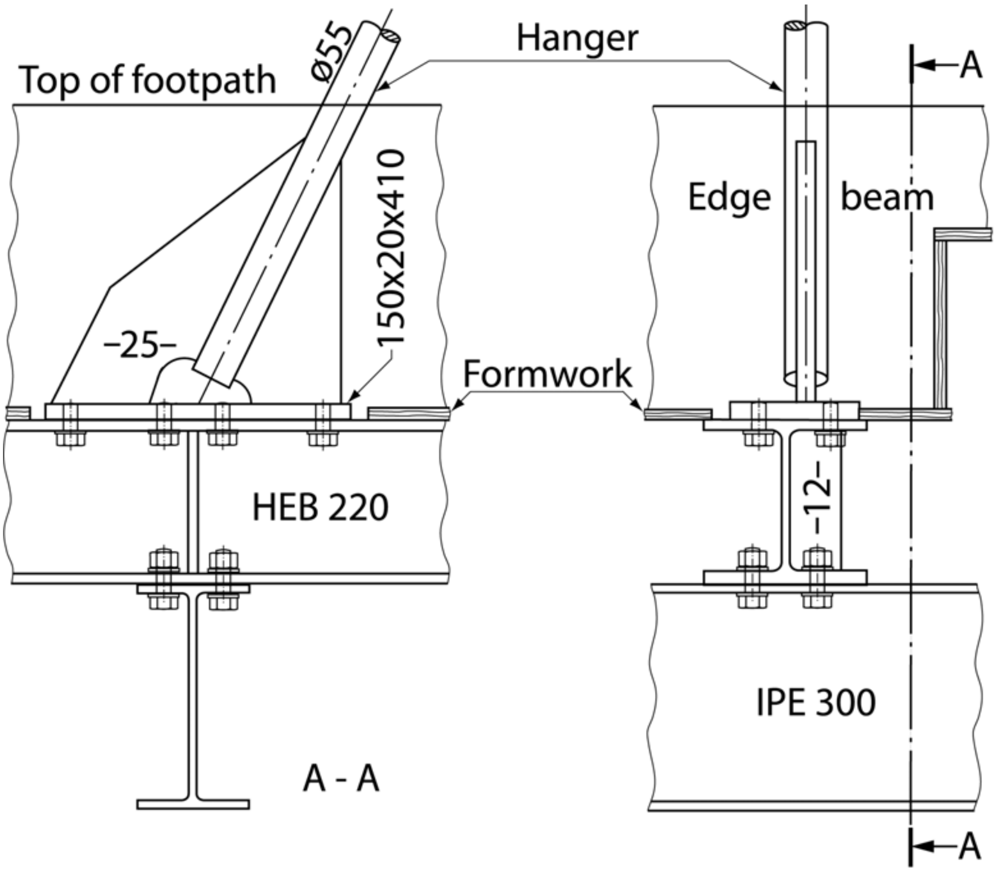

Fig. 4. Joint in a temporary lower chord

If the permanent lower chord is prestressed or partially prestressed in the transverse direction, the anchors of the prestressing members should be fastened to the ends of the arches which are shown in fig. 4.

During the casting of the edge beam it is best to avoid relaxation of the hangers. It is easier to avoid relaxation of hangers when the edge beam is cast starting from both ends. In this way working joints in the edge beam can also be avoided. Working joints in the concrete can be tolerated because afterwards they will be covered by asphalt.

The distance between the transversal beams can be kept constant because the maximum bending in the temporary lower chord occurs when the edge beam is cast. The maximum tension in the lower chord occurs when the concrete slab between the edge beams is cast. Then most of the bending in the lower chord is taken by the edge beam. The prestressing cables take some of the tension in the tie. It is wind during casting of the edge beam that decides the necessary dimension of the longitudinal beam in the lower chord. Fig 5 shows an erection of a network arch at the site of the Straubing Bridge across the Danube [iv].

The erection of a skew network arch across a canal is shown in [ii,iii]. Fig. 5. shows a suggestion Straubing Bridge uses only twice the steel needed for a network arch with surprisingly similar dimensions. Fig. 24 in [ii] compares axial forces and bending moments in the two bridges.

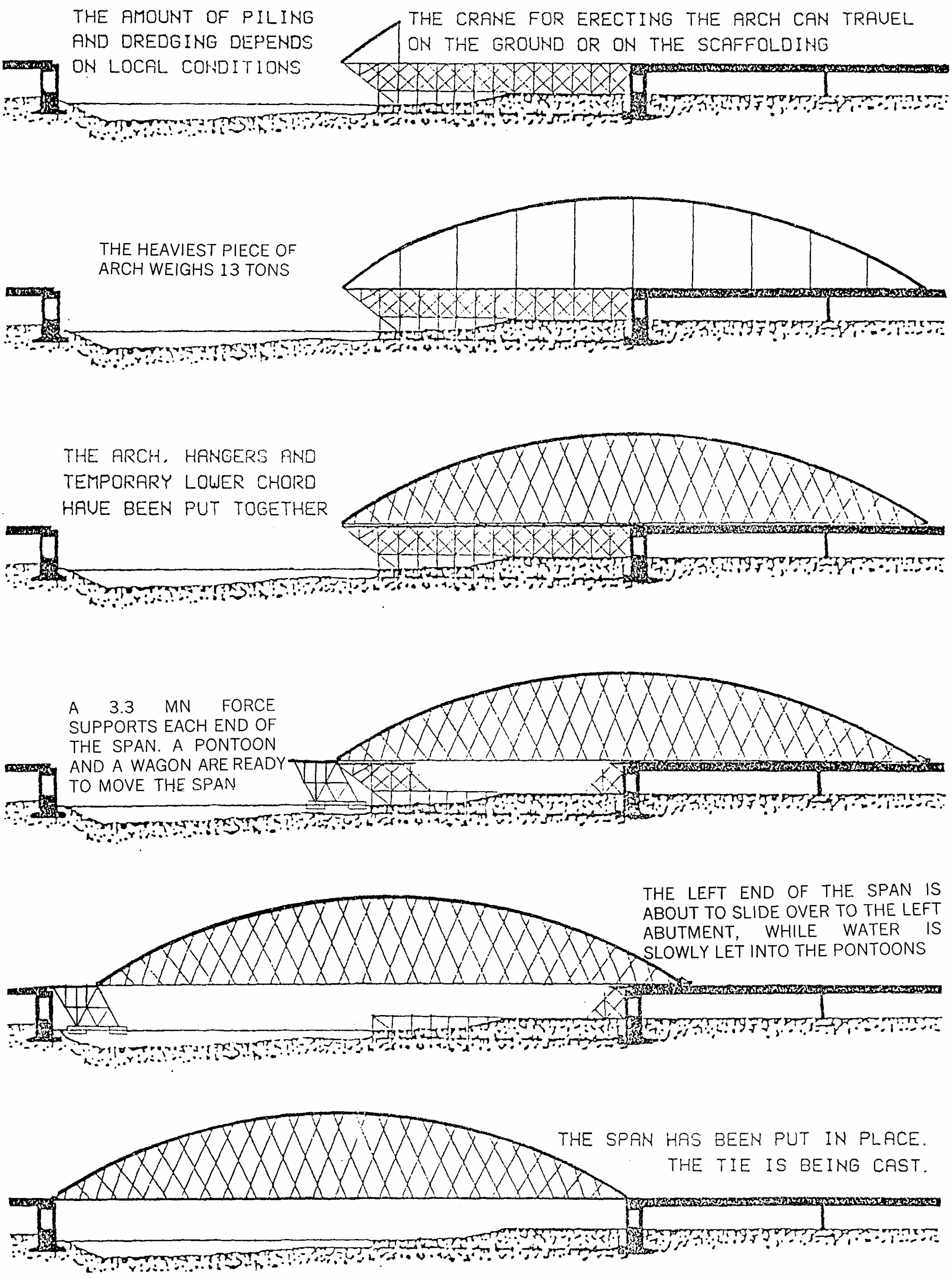

Fig. 5 shows the erection of a network arch spanning 200 m.

2.3 Erection of multispan bridges by cranes or pontoons

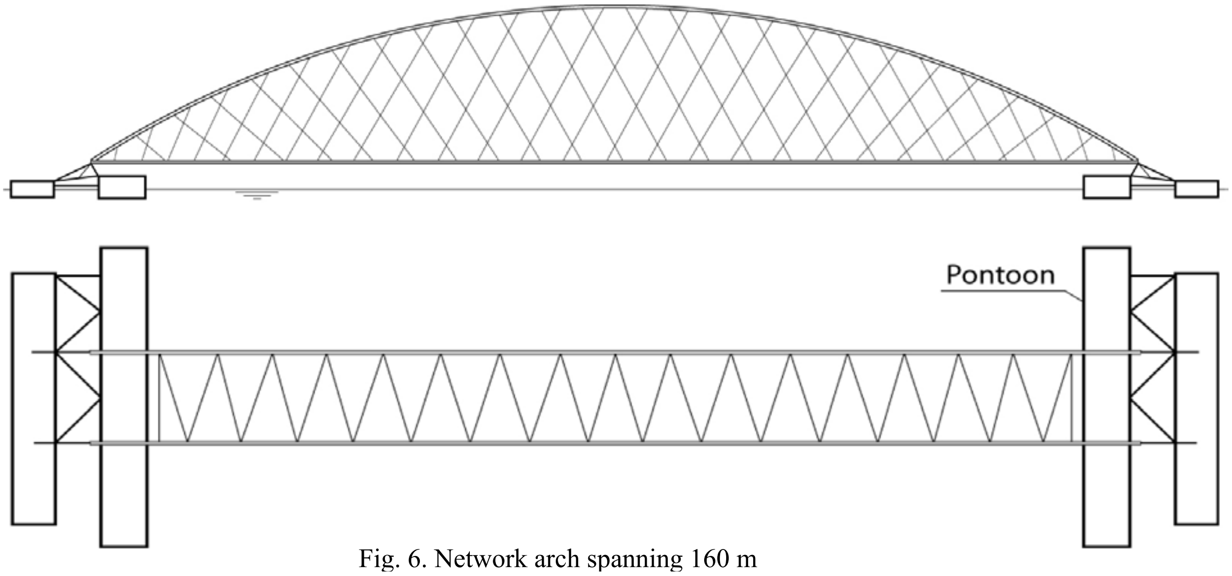

Fig. 6. Network arch spanning 160 m

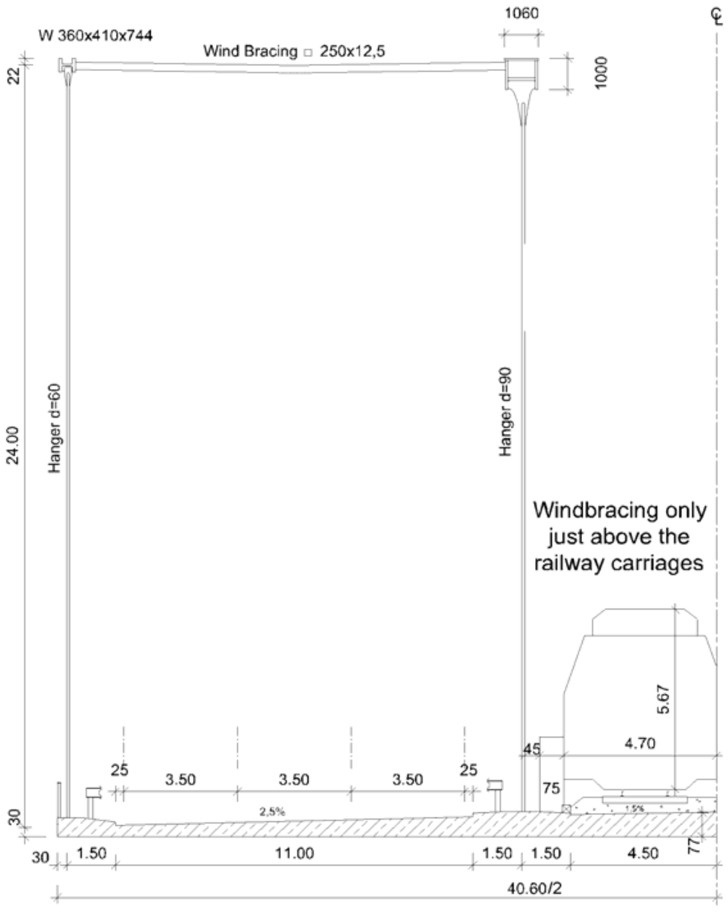

Fig. 7. Half cross-section of a network arch spanning 160 m[v]

Erection of network arches by means of big floating cranes offers significant technical and economic advantages, but they can only be used in costal regions and in the estuary of big rivers. If suitable cranes are not available, pontoons can be used for bringing the steel skeletons to the pillars.

If suitable pontoons cannot be found, they can be built for the purpose. A pontoon to be used in rivers needs less strength than ocean-going pontoons.

The span in fig. 6 is part of fig. 7 and 8. The bridge in fig. 8 has been calculated in Mathias Räck's graduation thesis at TU-Dresden in 2003[v]. The weight of the structural steel of the whole bridge was found to be 1226 t. 200 t of rebars and 311 t of prestressing steel were needed. 578 t of steel were found to be needed for the temporary lower chord. In this contribution "t" means metric tons.

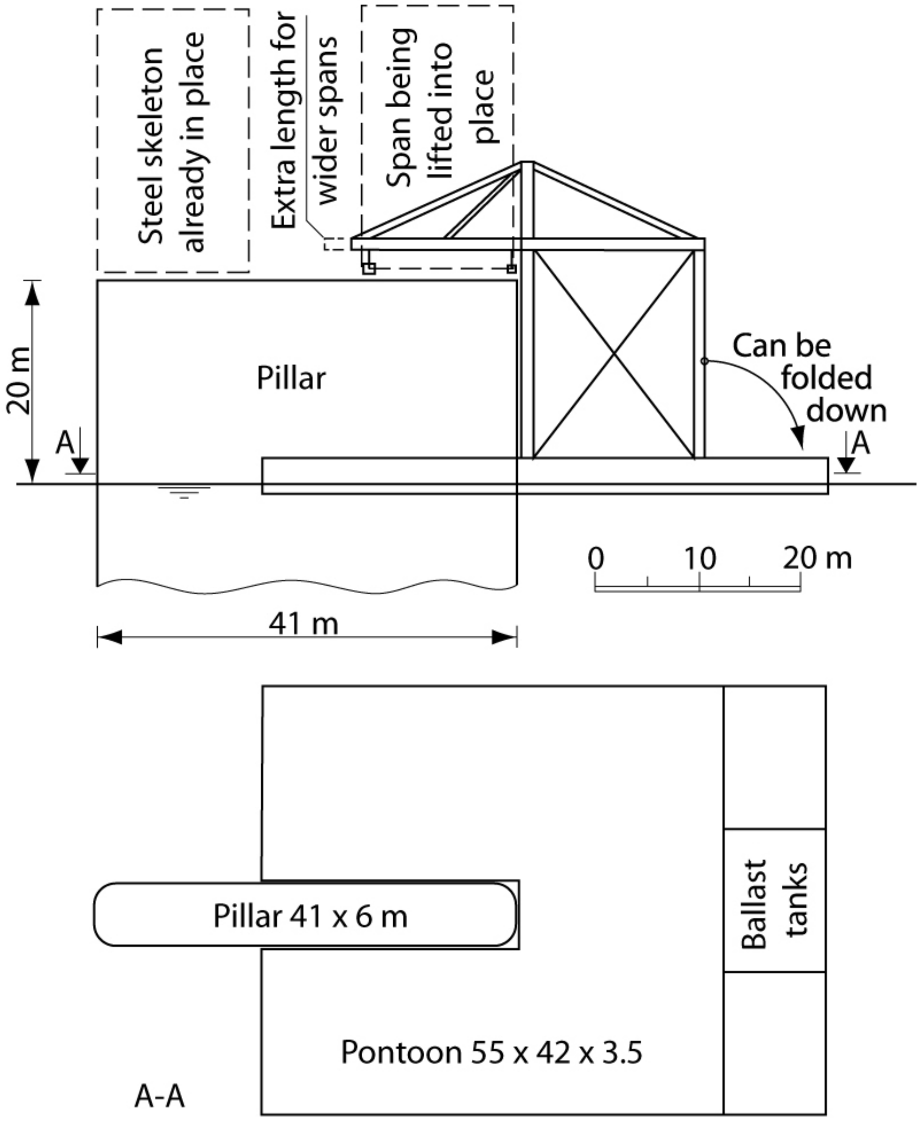

Fig. 8. A crane for lifting the span shown in fig 6 and 7.

For long bridges in wide rivers the crane in fig. 8 might bring the steel skeleton of network arches from the shore to the pillars. The crane can be folded down to pass under existing bridges. It needs less than 1 m of water under the pontoon. The crane in fig. 8 is shown erecting half the steel skeleton of the network arch in fig. 6 and 7. The capacity of each of the two cranes must be nearly 500 t. When both steel skeletons in fig. 9 are in place, the concrete tie can be cast. At the top of the pillars there must be room for prestressing the longitudinal cables in the tie.

The crane in fig. 8 can also be used to erect network arches for road bridges with four lanes. Road bridges are much lighter than railway bridges. For bridges with pillars more than 20 m high transport by pontoons might be a better idea. For higher pillars the pontoon for cranes like the one in fig.8 would be very big. While the current pushes the pontoons against the pillars, lifting devices on the pillars could be used to put the steel skeletons in place on the pillars.

If the expected waves are not too big, network arches of any known size can be lifted in place by big floating cranes. Finished spans up to 300 m can easily be lifted into place by big floating cranes. Whether steel skeletons or finished spans are to be lifted depends more on the suitable room on shore than on the weight of the finished span.

2.3 **Erection of optimal network arches on ice covered rivers**

The steel skeleton with a temporary lower chord can be erected on ice and be lifted onto the pillars. Using the ice for the erection of optimal network arches would be cost-efficient and would help to reduce winter unemployment.

To make the span look good, the lower chord should have an upward camber of at least 1% of the span. To get a suitable camber of the lower chord, blocks of wood of varying heights resting on the ice can support the transverse beams in the temporary lower chord.

For this type of erection one would want to prevent water from seeping onto the surface of the ice near the steel skeleton. If this is achieved, the strength of the ice cover would be ample. In a personal communication L. Fransson suggested an experiment to find how thick the ice should be[ii]. It seems that a 700 mm ice cover of good quality is sufficient for a steel structure weighing 1.2 t per m. By pumping water onto the ice on cold days sufficient thickness can be produced. Spraying water into the air above the ice can accelerate the process.

Intermediate layers of snow should be avoided because such layers would reduce the strength of the ice cover. Upstream and around the bridge site, the snow should be removed because the insulating effect of the snow could make the ice melt from below. Upstream it might be enough to put the snow in longish heaps. About two weeks should be enough for erecting the steel skeleton.

Where strong ice might break up at any time, the steel skeleton can be assembled on the ramps and/or side spans. When the ice is strong enough, the steel skeleton can be pulled over to the far abutment. This method of erection is more likely to be used for spans under 100 m, because longer spans need very thick ice. To make the ice cover strong enough, it might be reinforced[iv]. There is more on erection of network arches on ice in [ii]**.**

3 Reasons for using the temporary lower chord

The author can list a lot of reasons why the full potential of a network arch can be achieved only if the tie is a slab.

1. A permanent lower chord would be much heavier than a temporary lower chord and it would need much more maintenance.
2. The concentrated wheel loads always cause a lot of bending in the slab. In narrow bridges only moderate amounts of extra reinforcement are needed for the slab to span between the arches. Transverse beams would make the reinforcement in the slab more complicated.
3. A temporary lower chord can be used again and again in bridges of varying widths and lengths. One just has to make some new holes and maybe cut or weld some beams and wind bracing. The wood on the temporary lower chord is very simple and can be reused.
4. A permanent lower chord would be shop welded and would have a corrosion protection that has to be maintained forever. The temporary lower chord is joined together by high strength bolts. It needs no corrosion protection and can be produced on site. Thus per ton cost of fabrication is not high.

5. The great longitudinal tensile forces in the tie are best taken by prestressing cables because of the high strength-to-cost ratio. In railway bridges cables prestressed against concrete will take fatigue well.
6. A permanent tie of structural steel in tension gives cracks in a concrete slab above it. This reduces the durability of the concrete slab. The longitudinally partially prestressed slab in the lower chord of a network arch bridge is favourable as far as maintenance is concerned.
7. The longitudinal bending moments in the lower chord are so small that there is no need for a longitudinal beam of structural steel to take the longitudinal bending.
8. If you use transversal beams, the loads on the slab are concentrated before they reach the edge beam. This gives more bending in the edge beams and in the arches. In [ii] page 66 it is shown how the wheel loads in the network arch in [ii] pp. 60 to 66 are distributed when they reach the edge beam.
9. The temporary lower chord is simple to erect and remove. See [ii] pp 52 to 55. A part of the formwork of the lower chord is made into a travelling platform for removing the lower chord and formwork. If a permanent lower chord is used, the formwork would still have to be removed unless prefabricated slabs are used. Then the concrete on top leads to a heavy tie.
10. A permanent longitudinal temporary steel chord leads to a deeper lower chord. This is unfavourable from the aesthetic point of view and leads to longer ramps at some bridge sites.

4 Where does the optimal network arch compete best?

The network arch probably competes best for spans between 100 and 150 m. In railway bridges slightly shorter spans might be very competitive. The vertical reactions and the low weight are an advantage where soil conditions are difficult. With a high strength to weight ratio the optimal network arch is suitable for seismic regions. Because the network arch is related to trusses it is a very stiff structure. The partial longitudinal prestress in the lower cord adds to the stiffness. That is an advantage where small deflections are important.

The optimal network arch has advantages in flat terrain where there is little room for members under the lane. The slim tie leads to shorter ramps. This is more important in rail than in road bridges because the slope of rails is smaller than the slope of roads. This might be a reason why railway bridges are more likely to have structural members above the lane.

The network arch is advantageous over navigable water where cranes or pontoons are available for lifting the steel skeleton of the network arch in place. This is especially so in costal areas where big floating cranes are available. See page 7.

Since the network arch uses little steel, it is very competitive where the price of man-hours is small compared to the price of steel. This only applies when suitable manpower with a sufficient technological know-how is available. If the bridge is a through arch with navigable water underneath, then the part that is above the lane can be a network arch. The steel skeleton for this part can be lifted in place from pontoons[ii] pp. 20 and 20.

4 CONCLUSION

All members in an optimal network arch carry forces very efficiently. Combined with suitable methods of erection the optimal network arch must be an economical solution. The network arch would be especially effective in third world countries with high ratio of cost of materials to the cost of labour. Sufficient high technical knowledge must be available. An Indian firm of consultants has designed five network arches for the National Highways 21 and 22.

The most promising methods of erection combine the structural steel with a temporary lower chord. This steel structure can be moved and/or lifted. It has enough strength and stiffness to carry the casting of the permanent concrete tie.

The tie of the optimal network arch is a simple concrete slab. It gives the shortest possible ramps when traffic must be lifted to make room for traffic underneath the bridge. During the casting of the edge beams, relaxations of hangers should be avoided.

The optimal network arches which have been built and the examples which were designed in several graduation theses in recent years[vii] show that very little steel is used. Building network arches would save money. If the optimal network arch had been a standard type of bridge, known to most bridge engineers, it would probably have been hard to argue convincingly for the usual bowstring arch bridges.

5 REFERENCES

[i] C. Ostenfeld *"Christiani og Nielsen, Jernbetonens danske pionerer"* (The Danish Pioneers of Reinforced Concrete) Polyteknisk Forlag, Lyngby1976.

[ii] P. Tveit "The Network Arch. An Extended Manuscript from 21 Lectures in 12 Countries" http://pchome.grm.hia.no/~pert/ This home page will be updated at irregular intervals. 2000.

[iii] P. Tveit "Reduce Costs by Building Optimal Network Arches", Proceedings of arch'04, Barcelona, November 2004

[iv] R. Kahman and T. Beisel (1979) "Eine außergewöhnliche Montagemethode für die Bogenbrücke bei Straubing." Der Stahlbau 1979. Heft 4. Berlin.

[v] Räck, M. [2003]. "Entwurf einer kombinierten Straßen-Eisenbahn-Netzwerkbogen-brücke" (Draft of a Network Arch for a Combined Road and Railway Bridge) Graduation thesis at TU-Dresden. August 2003. 237 pages. A revised version of this thesis can be found at http://fag.grm.hia.no/fagstoff/pert/

[vi] K. Cederwall, & L. Fransson, "Förstärkning av ett istäckes bärförmåga med armering." (Strengthening of Sheets of Ice by Reinforcement." In Swedish.) Publ. 79:1 från avd før Konstrutionsteknik, Högskolan i Luleå. (Publ 79 from Department of Structural Design, Högskolan i Luleå.). 1979.

[vii] S. Teich, & S. Wendelin, 2001, U. Steimann, 2002, B. Brunn & Frank Schanack 2003, and Mathias Räck, 2003. Revised editions of these graduation theses from TU-Dresden can be found at http://fag.grm.hia.no/fagstoff/pert/